BONNEVILLE POWER ADMINISTRATION

Environment, Fish & Wildlife Publication

Document ID #P126054
Report covers work performed under BPA contract #50150
Report was completed under BPA contract #54741

PIT-TAG INTERROGATION SYSTEM EFFICIENCY STUDY

Annual Report of
U.S. Geological Survey Activities

November 2010 – October 2011

March 2012

Hood River PIT-Tag Interrogation System Efficiency Study

Annual Report of
U.S. Geological Survey Activities

November 2010 – October 2011

Ian G. Jezorek, Fishery Biologist
and
Patrick J. Connolly, Lead Research Fish Biologist

U.S. Geological Survey
Western Fisheries Research Center
Columbia River Research Laboratory
Cook, WA 98605

Funded by:

United States Department of Energy
Bonneville Power Administration
Division of Fish and Wildlife
Portland, OR 97208

BPA Project Number: 1988-053-03
Contract Number: 50150

April 2012

Table of Contents

List of Figures……... 3

List of Tables…… 3

Introduction…… 4

Work Elements from Contract 50150 and progress…….. 7

G: 157. Collect/Generate/Validate Field and Lab Data…… 7

D: 70. Install Fish Monitoring Equipment…… 11

E: 162. Analyze/Interpret Data……. 11

F: 148. Install Flow Measuring Device……. 13

H: 159. Transfer/Consolidate Regionally Standardized Data……14

Discussion……. 14

Acknowledgements……18

References……. 20

List of Figures

Figure 1. Location of the PIT-tag interrogation system installed at the mouth of the Hood River, OR, in September 2011…….. 21

Figure 2. Original antenna configuration of the PIT-tag interrogation system at the mouth of the Hood River, OR, September 2011…….. 22

Figure 3. Damages to the PIT-tag interrogation system at the mouth of the Hood River, OR after the flood on 16 January 2011…… 23

Figure 4. Number of fish detections per week at the PIT-tag interrogation site at the mouth of the Hood River, OR, and Bonneville Pool elevation at the Stevenson, WA gage… 24

Figure 5. New configuration of the PIT-tag interrogation system at the mouth of the Hood River, OR, as deployed in September 2011…….. 25

Figure 6. Location of the PIT-tag interrogation system installed at the East Fork Acclimation site on the Hood River, OR……26

Figure 7. Antenna configuration of the three antennas in the exit channel of the East Fork acclimation site during spring 2011……..27

List of Tables

Table 1. Path detection efficiency estimates at the PIT-tag interrogation system at the mouth of the Hood River, OR……28

Introduction

During summer 2010, an agreement was made between the US Geological Survey-Columbia River Research Laboratory (USGS-CRRL) and the Confederated Tribes of the Warm Springs (CTWS) to operate an experimental Passive Integrated Transponder (PIT)-tag interrogation system (PTIS) near the mouth of the Hood River for a year and provide fish-detection efficiency estimates (Bonneville Power Administration (BPA) project number 1988-053-03, contract number 50150). A previous agreement between Oregon Department of Fish and Wildlife (ODFW) and USGS-CRRL had funded materials acquisition, construction, and installation of the PTIS (BPA project number 1988-053-04, contract number 48684). The primary purpose of the project was to test the efficacy of a PTIS in the lower Hood River for providing data on returning adult salmonids to the Hood River as part of the Hood River Production Monitor and Evaluation project (HRPME).

Because PIT tags are small, relatively inexpensive, carry no internal battery, and last through the lifespan of most fishes, they are commonly used in long term fish monitoring projects. They have been extensively used in the Columbia River basin to monitor salmonid behavior and survival through life stages and migration routes in the mainstem Columbia River (Skalski et al. 1998; Zabel and Achord 2004). Increasingly, PIT-tag detection equipment has been deployed in streams to investigate salmonid behavior (Zydlewski et al. 2001, 2006; Riley et al. 2003; Bond et al. 2007). Most of the detection systems deployed and evaluated to date have been in much smaller streams than the mainstem of the Hood River (Zydlewski et al. 2001, 2006; Bond et al. 2007; Horton et al. 2007; Connolly et al. 2008), but researchers are attempting to expand detection abilities to larger streams and rivers. Large streams and rivers can prove extremely challenging to monitor. Some systems have showed promise for contributing valuable detection data, others have proved less successful. A detection system in the Klamath River (Beeman et al. 2012), a site similar in size to the Hood River, suffered problems from cables being dislodged and high water that resulted in a detection efficiency estimate for juvenile coho salmon of less than 0.05.

An additional USGS-CRRL task, under contract number 50150, was to build three antennas for use with Destron-Fearing 2001F-ISO PIT tag readers. These antennas would be

used at the East Fork Hood River Acclimation site. They would be placed in the outflow channel to inform managers about the number of PIT tagged steelhead smolts released to the Hood River after a period of acclimation when some mortality and predation might occur.

Site selection, antenna construction, and deployment

A site at the mouth of the Hood River was selected at the downstream end of the west-side jetty, on Port of Hood River property (Figure 1). Several other sites near the river mouth were investigated but were rejected for combinations of the following factors: lack of access, water that was too deep or swift for personnel to effectively work, unstable stream channel and substrate, and high angler use. The site chosen allowed vehicle access, appeared to have a relatively stable channel structure (though with a mobile cobble and gravel substrate), and was shallow enough to allow personnel to work with large antennas during periods of low flows. Additionally, the backwater effect from the Columbia River and the width of the Hood River channel would help to buffer water velocities and debris strike velocities during high flow events common to the Hood River. The Hood River was about 90 m wide at the site.

We chose a Destron-Fearing 1001M transceiver (MUX) to power the site at the mouth of the Hood River. This transceiver would detect 134.2 kHz PIT full duplex tags, the standard PIT tag type used in salmonids in the Columbia River basin, and could power up to six antennas. A set of two antenna arrays (three antennas in each array) was agreed upon by USGS and HRPME as the configuration. Each array was about 36-m long with one array about 25-m upstream of the other (Figure 2). This antenna configuration covered the thalweg along the west bank. Water depth along the west bank at antennas 1 and 4 was about 0.7 to 1.0 m, depth under the outer antennas ranged from about 0.7 to 0.3 m. While the two-array antenna configuration would allow direction of movement and path-efficiency estimates to be made, much of the channel would be without antenna coverage. At the time of installation, the portion of the channel without antenna coverage was a shallow riffle generally less than 0.4 m deep.

During August 2010, ODFW and USGS purchased materials for building six antennas. Six antennas were constructed at USGS-CRRL. The antennas were all 12-m long and of either 4-piece or 2-piece modular design. Modular antennas consist of multiple separate pieces that are

connected together with underwater cable connections that then function as one antenna, allowing antennas longer than 6-m to be deployed. Two of the antennas had four 3-m modules and two antennas had two 6-m modules (Figure 2). Testing with Earl Prentice, of Prentice and Associates, had demonstrated efficacy of modular antennas of up to 12-m length, though read range was reduced relative to antennas with length of 6 m or less. Test results found that the modular antennas would read tags at up to 25 cm but that they could be more susceptible to noise than shorter antennas (pers comm. Earl Prentice, Prentice and Associates). We had successfully used modular antennas at sites in the Methow River, WA and the Little Colorado River, AZ. Because the primary focus of the site at the Hood River mouth was detection of adults, which likely are traveling very close to the substrate (Hughes 2004; Quinn 2005), the modular antenna design was selected to allow more cross-channel coverage even though the longer antennas were expected to have less read range than shorter antennas. The four-piece modular design allowed construction of 12-m antennas that would conform to the bottom profile in the thalweg area with minimal gaps between antenna and substrate. The individual modules were constructed with Schedule 80 PVC pipe housing an antenna of Litz-type wire. All antennas were constructed and tested at CRRL and had a tag read range of about 16 cm in the CRRL workshop. Though this read range is less than that found by Earl Prentice, the test area at CRRL is subject to electronic noise and reduced read ranges compared to those found in a low noise environment such as Earl Prentice's facility.

We installed the antennas at the mouth of the Hood River during a two-week period in early September 2010. Flow in the Hood River at the time of installation was about 280 cubic feet per second (cfs). Anchoring material was purchased by ODFW and USGS. The anchors were primarily Manta-Ray (MR-88 and MR-4) models that were driven into the cobble substrate with a 60-lb jackhammer. The antennas were attached to the anchor rods with pipe clamps or with raft straps to stainless steel eyed nuts on the threaded anchor rods. Some Arrowhead Earth Anchors were also installed by sledgehammer or post-pounder. The antenna cables were secured to the substrate with rebar staples.

A small shed was constructed by ODFW to house the onshore electronics. The MUX, batteries, and charge controller were mounted inside. We hoped to power the site with grid

power, but the Port of Hood River rejected overhead lines in the area due to concerns with the heavy kiteboarding use close by, and line burial was not possible on the rock jetty. Solar power was chosen to power the PTIS. Three solar panels (24V 180W) were mounted to the roof of the shed facing directly south. The solar panels were connected to a charging circuit that contained two banks of batteries (each bank was two 12V batteries wired in series for 24V) and a switching mechanism to alternately charge one bank of batteries while the other bank was isolated from the charging circuit and powering the MUX.

Initial operations

The PTIS at the mouth of the Hood River became operational during late summer 2010. Operation and data collection began at the site on 14 September 2010 with antennas 1, 4, and 5. Antennas 2, 3, and 6 were connected about a week later. Several of the antennas required a reduction in the capacitors from those applied when constructed at CRRL to adjust antenna inductance to a range suitable for the water chemistry and sediment of the Hood River. Fish were detected right away, and the MUX was collecting data in a format suitable for submission to the PTAGIS database.

An unexpected problem encountered at the site was very high electromagnetic interference “noise”. This noise was of a magnitude to prevent reading a PIT tag even when placed on the antenna itself. The noise was least pronounced on the near-shore antennas (1 and 4), more pronounced on the middle antennas (2 and 5), and extreme on the outermost antennas (3 and 6; Figure 2). Due to this noise, tags would not read on antennas 3 and 6, and only occasionally on antennas 2 and 5.

Work Elements from Contract 50150 and progress

G: 157. Collect/Generate/Validate Field and Lab Data

Title: Insure data collection from the system

Description: USGS will insure that the PTIS at the Hood River mouth is fully functional and is archiving data in the proper format.

Progress:

Personnel from USGS-CRRL visited the site approximately weekly to download files and maintain the site. From 14 September 2010 to 31 October 2011, 162 individual fish were detected, comprised of 96 juvenile Chinook salmon, 2 adult Chinook salmon, 34 juvenile steelhead, 30 adult steelhead, and 1 cutthroat trout of unknown life stage. The solar charging system functioned well throughout the period of operation, and a change of batteries was required only once (on 20 December 2010).

Though adequate power was maintained and fish were detected throughout the study period, a number of operational issues proved extremely challenging. Electronic noise was a persistent factor throughout the monitoring period causing reduced read ranges or inability to read tags on some antennas (Personnel from HRPP communicated that noise testing had been done at the site prior to inception of the project and low noise levels had been found). High flows and flooding during winter destroyed antennas and changed the stream channel and thalweg. Sand deposits buried the antennas when the Bonneville Pool was held at very high elevation during the late spring and early summer. The batteries and charging equipment were stolen when the shed was broken into (between 30 September and 5 October) resulting in a month of down time. Mitigating these challenges, to the extent we could, consumed much personnel time and resources throughout the study period.

To investigate potential causes of noise at the site, we took a spectrum analyzer to the site on 4 November 2010, and found strong signals at 300 kHz, 860.66 kHz, 1.34 MHz, and 2.672 MHz. The latter two signals were likely from AM radio stations, the sources of the first two signals remain unknown. We contacted Sigma Eight Inc, an electrical engineering firm that had provided help with noise issues on several CRRL radio tagging studies. Sigma Eight personnel suspected that a harmonic effect from the 1.34 MHz signal may be the cause of the noise. A MUX was sent to Sigma Eight in late November 2010 for design work on a filter.

On 16 January 2011, the Hood River experienced a significant high flow event, peaking at about 14,000 cfs. The antenna anchoring system worked well with no antennas dislodged from their locations. The high flow did result in much movement of large woody debris. Debris strikes disabled antennas 1, 2, 3, and 5 (Figure 3). Both modules of Antenna 5 were destroyed and one module each was destroyed on antennas 2 and 3 (both two-piece modular antennas). The fourth module on Antenna 1 was destroyed.

In addition to the destruction of antennas, another consequence of the 14 January 2011 flood was deepening of the river channel to the east side of the antennas. Some deposition of cobble occurred in the area around the antennas resulting in a split thalweg with a slot under the Antenna 1 to Antenna 4 pathway and another slot in the channel east of the antennas. Downstream of the antenna arrays and the thalweg slots, the river became very uniform in depth across the channel with no defined thalweg or obvious pathway for fish.

On 8 February 2011, we received the 1.34 MHz filter from Sigma Eight and tested it at the site. Though the filter greatly reduced the signal at 1.34 MHz, it did not eliminate the noise that hindered PIT-tag detection.

On 11 February 2011, a period of moderate flow (about 1,000 cfs) allowed access to Antenna 1 so that we could attach a “mini module” to replace the broken fourth module. The mini module matched the inductance of destroyed full-size module but was small enough for personnel to handle and deploy during flows that would not allow work with a full-size module. This allowed operation of Antenna 1, though it was shortened from 12 m to about 9.2 m. During late winter of 2011, parts were purchased by CTWS to construct two additional mini modules to patch antennas 2 and 3 until lower flows might allow full-size modules to be installed. The mini modules were constructed, but flow levels in the Hood River and the elevation of Bonneville Pool prevented installation through spring 2011.

Beginning in late April and early May of 2011, the Bonneville Pool elevation was held very high (up to 79 feet on the Stevenson, WA, USGS gage; Station 14128600). This continued into early July (Figure 4). The backwater effect from the high pool elevation resulted in

increased water depth over the antennas. The water depth above the antennas was nearly 2 m at times. Additionally, as the high water persisted, much sand carried downstream by the Hood River was deposited at the PTIS site due to the reduced water velocity. Up to 50 cm of sand was deposited over most of the antennas (more in some areas). Though it is possible to read PIT tags through some sand deposit, the depth of sand deposited exceeded read range over nearly all of the antenna area. Only a small corner of Antenna 1 was left visible near the riverbank. The high pool elevation and sand deposits precluded installation of the mini-modules to antennas 2 and 3. A decision was made to reconfigure the system with some new antennas during late summer of 2011. During August and early September 2011, USGS personnel removed most of the disabled-antenna pieces and all anchoring material that could be removed. Much sand was still present and many parts of the system had to be excavated prior to removal. Antenna 6 (2-piece 12-m modular) was removed to be redeployed in the new configuration.

Materials for two new antennas and anchoring were purchased by HRPME, and the antennas were constructed during summer 2011 at CRRL. The reconfigured system was installed during the week of 19 September 2011, though much sand deposit was still present at the site. The new configuration was a three-array design (Figure 5), which was hoped would provide better data for computing path efficiency and place antennas closer to the west bank where noise seemed less severe. The uppermost array consisted of two 2-piece 12-m modular antennas, the middle array consisted of one 4-piece 12-m modular antenna and one 6-m antenna, and the downstream array consisted of one 4-piece 12-m modular antenna. The 4-piece modular in the middle array was the original Antenna 1 (still in its original location on the riverbed), which still had the mini module attached. Both the mini module and the 3-m broken module were still buried in sand. Operation of the new configuration during the week following installation had antennas 1, 3, 4, and 5 reading tags with read range of 12 to 14 cm. Unfortunately Antenna 2 was saturated with noise and did not read tags. Antenna 2 is targeted to be replaced with a 6-m antenna (less susceptible to noise) as soon as conditions allow.

On 5 October 2011, during a routine downloading visit to the site, we discovered that the shed was broken into sometime after 30 September 2011, and the batteries and solar-charge controlling system had been stolen. This resulted in loss of power and data collection. Parts for a

new charge control system were purchased by HRPME and provided to USGS on 2 November 2011, at which point data collection resumed. Additional stolen items included some small tools, a multimeter, a small stepladder, and a metal storage box housing the batteries and charge controller. Additional locks were added to the shed door and to the battery housing box in the shed. The housing box was also cabled to the shed frame.

D: 70. Install Fish Monitoring Equipment

Title: Build and install antennas for the East Fork Acclimation Site

Description: USGS will build several antennas for use with 2001F-ISO transceivers, which will be installed in the outlet stream from the steelhead acclimation site on the East Fork of the Hood River.

Progress:

Three antennas and cables for the East Fork Acclimation site were built by USGS personnel during winter 2010-2011. Biomark tuning boxes were purchased and the antennas were tuned at CRRL. The three antennas were installed in the outflow channel at the East Fork Acclimation site (Figures 6 and 7) during February 2011. One antenna (1.8 m x 0.7 m) was placed to cover the downstream end of the concrete flume from the acclimation pond. The other two antennas (1.5 m x 0.7 m) were placed in the stream channel downstream of the end of the concrete flume. The antennas were separated by about 25 m and all were oriented in an upright, pass-through configuration.

E: 162. Analyze/Interpret Data

Title: Determine PTIS detection efficiencies

Description: Determine detection efficiencies of the PTIS at the mouth of the Hood River and of the array of detectors at the East Fork Acclimation Site release stream.

Progress:

We calculated path-detection efficiency estimates with detection data from the PTIS at the mouth of the Hood River (Table 1) for the path over antennas 1 and 4. We used the methods for calculating efficiency outlined in Connolly et al. (2008). Due to the noise issues and flood

damage, estimates for path-detection efficiency that are presented are strictly for the migratory path over antennas 1 and 4. The Hood River was about 90-m wide at the location of the system, antennas 1 and 4 were 12-m long (after installation of the mini module on 11 February 2011, antenna 1 was only 9.5-m long). We stratified the efficiency calculations by species, life stage (adult or juvenile), and water level (high or low). Staff gage readings at the site corresponded closely with the stage height of Bonneville Pool at Stevenson, WA (r = 0.89). Low water was classified as less than 75.5 feet elevation at the Bonneville Pool gage at Stevenson, which was about mean pool height during the course of the study. The path-detection efficiency estimates presented are representative of time periods when antennas 1 and 4 were operating and not buried. The estimates do not apply to the period during spring and early summer 2011 when antennas 1 and 4 were buried by sand or the period in fall 2011 when the site was not operating due to theft of batteries and charging system components.

Path-detection efficiency estimates varied by species and water level, but due to small numbers of detection events, uncertainty around the estimates was high (Table 1). The path-detection efficiency estimate for upstream moving adult steelhead at low water was 0.42 (SE = 0.20). There were not enough detection events to estimate path-detection efficiency for adult steelhead at high water, but the path-detection efficiency estimate for upstream moving adult steelhead across all water levels was 0.28 (SE = 0.21). Only two adult Chinook salmon were detected on the PTIS, so no estimate could be derived for them.

Recapture and creel survey data for adult steelhead from HRPME during the period covered by this report were provided to allow an estimate of site efficiency. Thirty-nine individual adult steelhead were recaptured upstream of the PTIS. These steelhead were known to have passed Bonneville Dam (by PIT-tag detections), confirming that they had returned from out of basin, requiring passage by the PTIS at the Hood River mouth. Four of these 39 steelhead were detected at the PTIS, suggesting a site efficiency of about 10% for adult steelhead. No adult steelhead were detected at the PTIS between 29 April 2011 and 26 September 2011 when the antennas were buried in sand and the Bonneville Pool was held at extremely high elevation (Figure 4). Twelve of the adult steelhead recapture events in the Hood River occurred during

May 2011, and those fish likely passed the PTIS during the period of extreme high water and antenna burial.

Twenty-three adult spring Chinook salmon were recaptured by HRPME during spring 2011 in the Hood River watershed. No spring Chinook adults were detected by the PTIS. Twenty of the recaptured adult spring Chinook salmon had interrogation records at Bonneville Dam. All 20 passed Bonneville Dam between 4 May 2011 and 1 July 2011, the same period that the Bonneville pool level was high, causing deep water over the antennas and sand deposits that buried the antennas.

Although the main focus of the PTIS at the mouth of the Hood River was for adult salmonids, we calculated path detection efficiency estimates for downstream migrating juvenile Chinook salmon and steelhead (Table 1). The path detection efficiency estimate for juvenile steelhead across all water levels was 0.62 (SE = 0.13), and for juvenile Chinook salmon was 0.49 (SE = 0.09).

The PTIS in the East Fork Acclimation site outflow channel performed well during the spring 2011 release of steelhead smolts from that location. The PTIS detected 3,479 PIT tagged fish from the acclimation site. The HRPME generated a file of tagged steelhead known to have been placed into the acclimation site. From that tag list, 279 fish were detected at Bonneville Dam or in the estuary trawl through 30 September 2011. All 279 of those fish were detected on the East Fork Acclimation site outflow PTIS, suggesting efficiency of 100% using a three-array system within that channel.

F: 148. Install Flow Measuring Device

Title: Install a staff gage near the PTIS at the mouth of Hood River

Description: USGS will install a staff gage near the PTIS at the mouth of the Hood River.

Progress:

We installed a staff gage immediately downstream of the PTIS at the mouth of the Hood River during October 2010. Staff gage readings were taken during visits to the site for downloading or maintenance. We found that the staff gage data correlated closely with the elevation of Bonneville Pool (r = 0.89) as measured at the Stevenson, WA USGS Gage (Station 14128600). Correlation with flow at the Hood River at Tucker Bridge gage (Station 14120000) was not as strong (r = 0.63). We used the Stevenson gage pool-elevation data to determine water height at time of passage of individual fish to stratify data for efficiency calculations. During 2012, a water level meter will be installed at the site to log water level multiple times per hour. This will allow fish detection data to be paired with water level data collected at the site.

H: 159. Transfer/Consolidate Regionally Standardized Data

Title: Submit data to PTAGIS

Description: USGS will insure that data collected are submitted to the PTAGIS database. Data will be downloaded, checked, and submitted approximately weekly throughout the project.

Progress:

Data are in a format compatible with PTAGIS and were collected and archived by staff from USGS. All data from the period covered by this report have been provided to HRPME staff. The site was not registered with PTAGIS due to potential changes to the antenna configuration as a result of noise issues and damage from flooding. Pending further evaluation of the site viability, we will have discussions with HRPME staff to decide on future actions and whether to register the site during 2012.

Discussion

The initial year of feasibility assessment for a PTIS to detect adult salmonids at the mouth of the Hood River proved challenging. Electronic noise was a persistent problem. Flooding destroyed antennas and caused stream channel changes that may have influenced adult salmonid migratory paths. Extremely high flow and pool height in the Columbia River during a

prolonged period resulted in high water at the site and caused sand deposition that buried antennas. Theft of equipment resulted in nearly a month of lost data collection. Despite the many difficulties, and detection of fewer fish than hoped, path detection efficiency estimates show potential for this site to contribute to efforts to estimate adult returns to the Hood River. Future estimates may be enhanced by or dependent on additional PTIS or recapture sites throughout the basin. Additional detection sites in the basin would increase ability to determine overall detection efficiency of the site at the mouth. Extra sites would also provide a buffer during times that effectiveness of the site at the mouth was reduced due to antenna damage, extreme high water, or sediment deposition.

We selected the current PTIS site at the mouth of the Hood River, but where water depth and velocity would allow personnel to manage large antennas. Flows exceeding about 600 cfs resulted in near impossible conditions for personnel to work with antennas at the current site. Additionally, we felt that the site was a spot where high-flow velocities would be less than at many locations in the Hood River where movement of boulders and dynamic in-channel braiding are common. The channel width and the effect of the Bonneville Pool at the site served to reduce stream power. Due to depth and water velocity, many other sites in the lower Hood River would prove extremely difficult for personnel to work even at low flows. This site also allowed positioning of the MUX and batteries relatively close to the antennas, but out of flood danger on the high jetty. An additional challenge of the Hood River is poor water clarity that often accompanies low flow periods during summer due to glacial runoff. Glacial flour can reduce visibility to just a few centimeters making anchoring and cable work in deeper water extremely difficult. Though some sites in the lower Hood River may offer higher possibility of detecting fish, the physical abilities of personnel to install and service that system must be considered, particularly if a site has higher water velocities.

Despite the velocity buffer that the current site provided, the flood of 16 January 2011 (about 14,000 cfs) destroyed five antenna modules, disabling four antennas. The damage was likely caused by large woody debris impacts. This flow event was about a three-to-five year interval flow so equivalent events are likely in the future. The anchoring system using Manta Ray earth anchors held up well, no antennas with these anchors were dislodged. Several of the

Arrowhead anchors did fail, and we do not recommend hand driving anchors in such a large river location. A few of the smaller earth anchors (MR-88 Manta Ray anchor attached to one-half inch threaded rod) shifted slightly. We would recommend that any future anchoring in the mainstem Hood River use strictly the MR-4 size Manta Ray anchor with five-eighth inch threaded rod. Stainless rings and pipe clamps used as connection points from threaded anchor rod to antenna both served well.

The 16 January 2011 flood changed the river channel. The river deepened on the east side of the antenna arrays, and the channel at the bar where the Hood River meets the Columbia River became more uniform, losing thalweg definition. Prior to installation of the PTIS, we did not know what path adult salmonids would follow through the Hood River channel, but surmised that many would follow the thalweg. At the time of installation, the thalweg was against the west bank and continued downstream through the bar area of the river mouth to the Columbia River. The thalweg change after the flood may have altered the path taken by upstream migratory adult salmonids. A radio-tag study of adult salmonids could demonstrate migratory pathways through the lower Hood River informing possible location of a PTIS. However, radio-tag studies are expensive and labor intensive, and future channel changes could result in formation of different pathways that may change fish behavior.

Migrating adult salmonids had many pathway options through the mouth of the Hood River during late spring and early summer 2011. During this time, the Bonneville Pool was held at extremely high levels. Sand, which was deposited due to reduced water velocity in the Hood River, both buried the antennas and filled in the west bank thalweg slot. Due to the extreme reduction in system performance while buried, the path-detection efficiency estimates cannot be applied to this period. The likelihood of such high pool levels in the future is unknown but could affect efficacy of a system during the spring and early summer if it occurs. This will depend on both climatic conditions and Columbia River flows, but also on operation of the Columbia River hydroelectric dams by the U.S. Army Corps of Engineers.

Reduced operational ability due to electronic noise persisted through the period covered by this report. The construction of a filter for the 1.34 MHz signal greatly reduced that frequency

but did not mitigate the noise affecting the antennas. Though development of a filter for a different frequency may help to reduce noise, the cost of building and testing filters is prohibitive. The long antennas (12 m) used at the site are somewhat more susceptible to noise. Antennas in the middle or outer positions in the arrays were saturated with noise. Shorter antennas that are less susceptible to noise may be desirable at this site. A combination of longer and shorter antennas may prove more effective at fish detection. The September 2011 site reconfiguration, which included a 6-m antenna, may inform us of this. We did much testing of differing antenna cable types (shielded wire, unshielded coaxial, and dual coaxial) and found that individual antennas performed differently with different cable types. Typically, PTIS sites deployed by USGS have used unshielded coaxial cable with little noise interference. As of this writing, we have not found a universal antenna and cable pairing that we feel works best at the site. We plan to continue to experiment with cabling during 2012 to try to reduce noise and improve performance.

Initial path-detection efficiency estimates at the site were encouraging for such a large river, though the variance of the estimates was high. This high variance was a result of relatively low sample sizes and a relatively low proportion of fish that were detected on multiple arrays. It is likely that many potential detection events were missed during the periods of antenna burial and down time due to theft. The burial period was in late spring and early summer, which corresponds to both smolt outmigration timing and upstream movement of adult Chinook salmon. Had the antennas not been buried, it is likely that additional detections of both adult and juvenile fish would have been recorded. Though it is unknown how many potential detection events were missed, any additional detections would have benefitted the confidence of the efficiency estimates. The extent of antenna burial events in the future is unknown, but if it is a rare occurrence, more detections can be expected during the spring period.

The addition of a third array during September 2011 may increase both the number of detections and the number of fish detected on multiple arrays. Because the 12-m antenna in the current Antenna 2 location is still recording high noise, it will likely be replaced with a 6-m antenna. Currently the MUX has a port available for one additional antenna to be connected, and we may consider another antenna as an extension to an array or as an additional array. Another

option to decrease variance of tag-detection efficiency estimates is to increase the population of tagged fish. Managers of the Hood River may have the option of increasing tagging levels, though this measure would incur further cost and concern for threatened and endangered species may limit tagging of wild fish.

Testing of the three-array design and experimentation with noise reduction techniques may result in better performance during the next operating period. However, site performance could still be much affected by variables such as flooding, channel changes, and Bonneville Pool levels. Another year of monitoring will serve to further evaluate the efficacy of this site. Though other sites near the mouth of the Hood River may be worthy of consideration for a PTIS, alternative site possibilities are limited by constraints imposed by access, geo-fluvial processes that result in very dynamic channel structure and the ability of personnel to effectively work in swift or deep water. If other sites within the Hood River watershed are considered for detection systems, we would recommend a preliminary in-stream test of antenna and cable types to determine if noise issues may be a factor.

The dynamic nature of the Hood River means that any mainstem site will likely be challenging to operate and subject to variable detection efficiency as water levels and channel structure change, and flooding causes potential damages to antennas or accumulation of sediment that buries antennas. A network of multiple sites to detect or recapture adult PIT-tagged fish in the Hood River may result in the best ability to determine escapement.

Acknowledgements

A number of people helped with the inception of this project. Chris Brun from the Confederated Tribes of the Warm Springs (CTWS) was a primary cooperator as were Rob Reagan and Phil Simpson of ODFW. Rod French of ODFW lent much support. Richard Golden was our BPA contracting officer's technical representative. Fellow USGS employees Brady Allen, Jessica Fischer, Brad Liedtke, Kyle Martens, Carrie Munz, Patrick Norby, and Stuart Oberg were crucial to antenna construction and deployment. Scott Evans supplied help with the spectrum analyzer. Lyndsay Brewer, Ryan Gerstenberger, and Jason Thomas of CTWS helped

much with antenna deployment. Nick Grzych and Nichole Bushey of ODFW also provided help with antenna deployment. Lisa Chambers and Justin McLaughlin of ODFW provided help with materials purchasing, and Justin constructed the electronics shed. Thanks to Earl Prentice for antenna testing and some consultation. Much thanks to Derek Faber of ODFW for lending us a jackhammer for anchoring. Jamie Gomez and one anonymous reviewer provided helpful feedback on this document. Any use of trade, firm, or product names is for descriptive purposes only and does not imply endorsement by the U.S. Government.

References

Beeman, J. W., B. Hayes, and K. Wright. 2012. Detection probability of an in-stream passive integrated transponder (PIT) tag detection system for juvenile salmonids in the Klamath River, northern California, 2011: U.S. Geological Survey Open-File Report 2012-1001, 14p.

Bond, M. H., C. V. Hanson, R. Baertsch, S. A. Hayes, and R. B. MacFarlane. 2007. A new low-cost instream antenna system for tracking passive integrated transponder (PIT) tagged fish in small streams. Transactions of the American Fisheries Society 136:562-566.

Connolly, P. J., I. G. Jezorek, K. Martens, and E. F. Prentice. 2008. Measuring performance of two stationary interrogation systems for detecting downstream and upstream movement of PIT-tagged salmonids. North American Journal of Fisheries Management 28:402–417.

Horton, G. E., T. L. Dubreuil, and B. H. Letcher. 2007. A model for estimating passive integrated transponder (PIT) tag antenna efficiencies for interval-specific emigration rates. Transactions of the American Fisheries Society 136:1165-1176.

Hughes, N. F. 2004. The wave-drag hypothesis: An explanation for size-based lateral segregation during the upstream migration of salmonids. Canadian Journal of Fisheries and Aquatic Sciences 61:103-109.

Quinn, T. P. The behavior and ecology of Pacific salmon and trout. American Fisheries Society Publication, Bethesda, MD.

Riley, W. D., M. O. Eagle, M. J. Ives, P. Rycroft, and A. Wilkinson. 2003. A portable passive integrated transponder multipoint decoder system for monitoring habitat use and behviour of freshwater fish in small streams. Fisheries Management and Ecology 10:265-268.

Skalski, J. R., S. G. Smith, R. N. Iwamoto, J. G. Williams, and A. Hoffman. 1998. Use of passive integrated transponder tags to estimate survival of migrant juvenile salmonids in the Snake and Columbia rivers. Canadian Journal of Fisheries and Aquatic Sciences 55:1484-1493.

Zabel, R. W., and S. Achord. 2004. Relating size of juveniles to survival within and among populations of Chinook salmon. Ecology 85:795-806.

Zydlewski, G. B., A. Haro, K. G. Whalen, and S. D. McCormick. 2001. Performance of stationary and portable passive transponder detection systems for monitoring of fish movements. Journal of Fish Biology 58:1471-1475.

Zydlewski, G. B., G. Horton, T. Dubreuil, B. Letcher, S. Casey, and J. Zydlewski. 2006. Remote monitoring of fish in small streams: a unified approach using PIT tags. Fisheries 31:492-502.

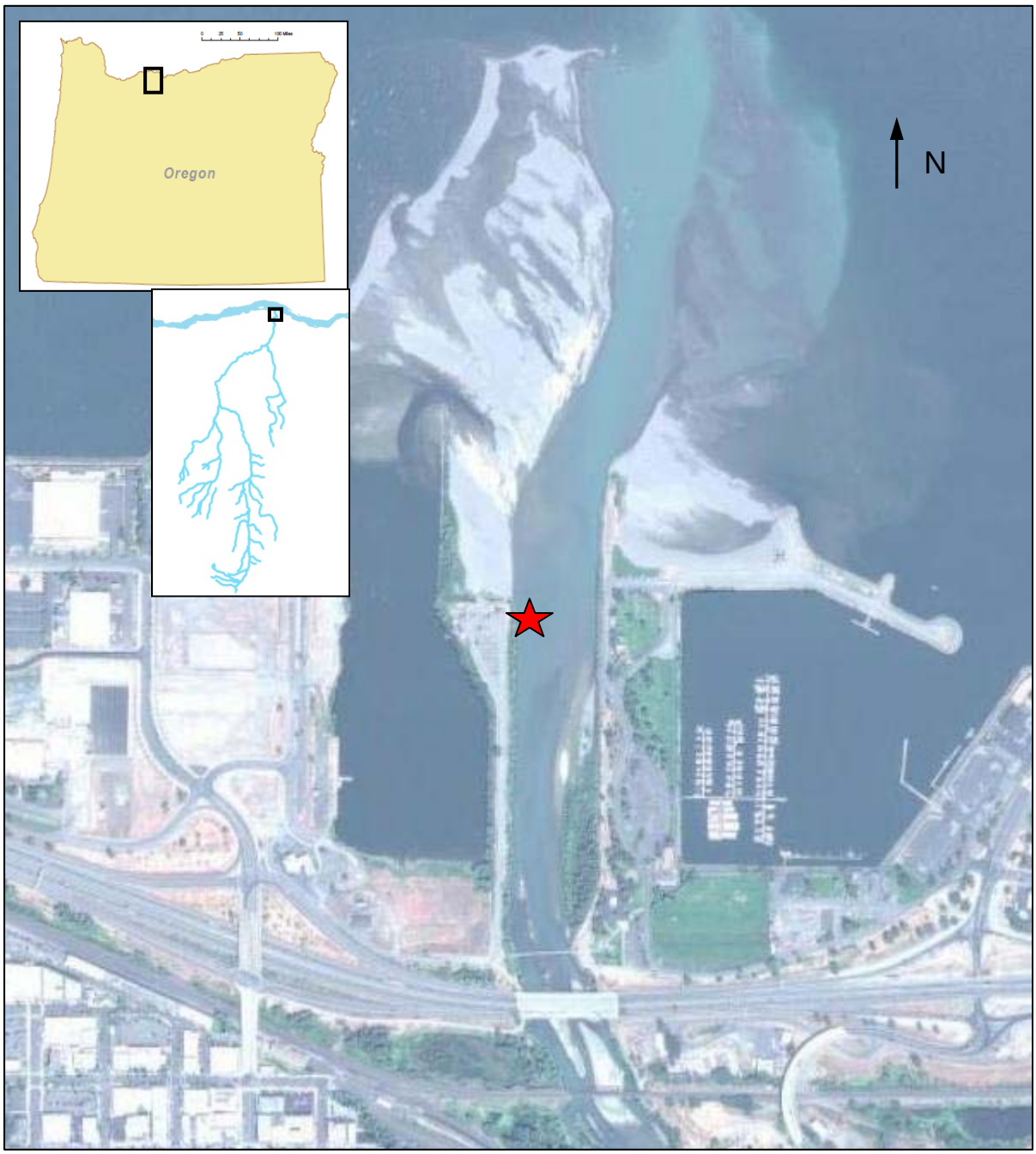

Figure 1. Location of the PIT-tag interrogation system installed at the mouth of the Hood River, OR, in September 2011.

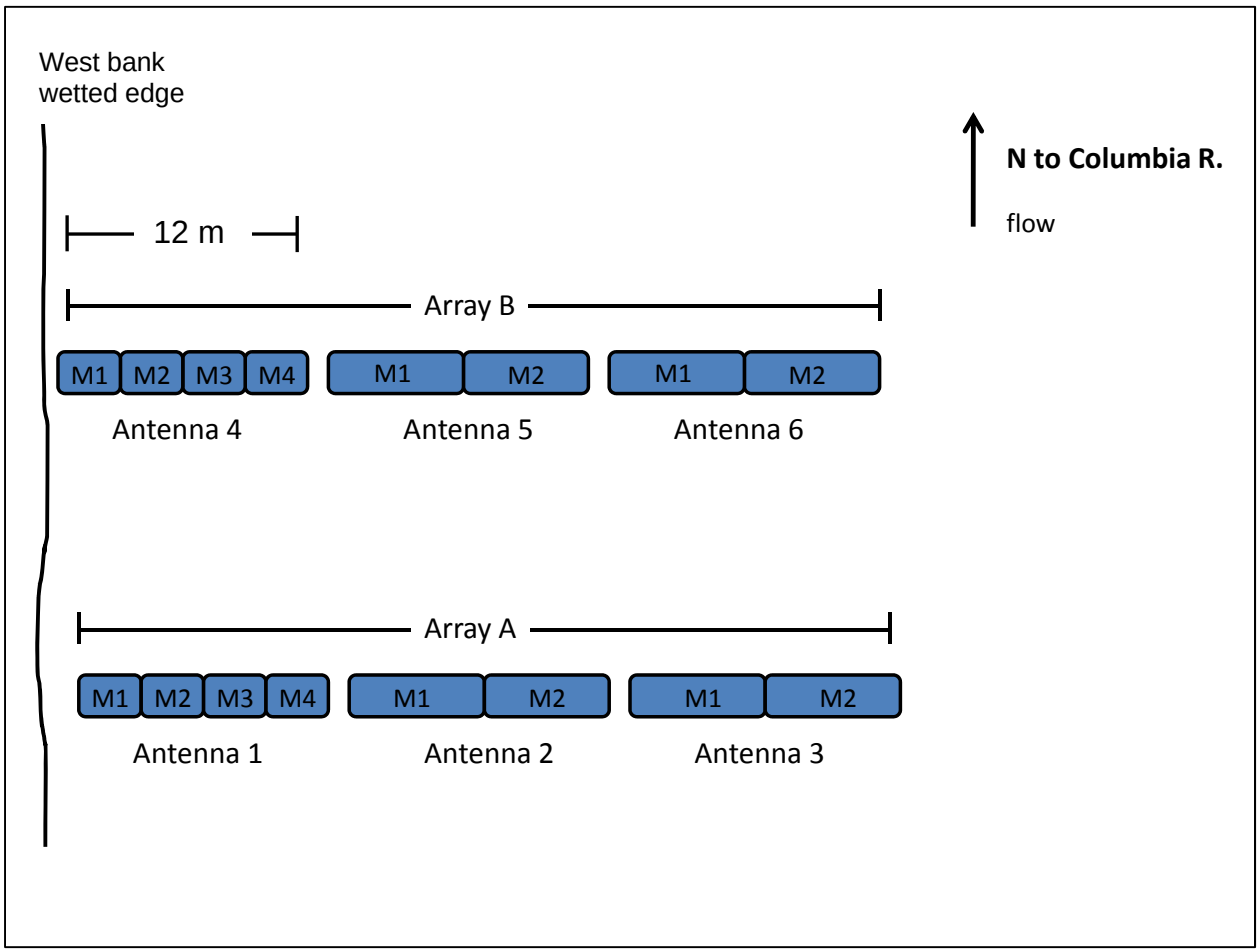

Figure 2. Original antenna configuration of the PIT-tag interrogation system at the mouth of the Hood River, OR, September 2010.

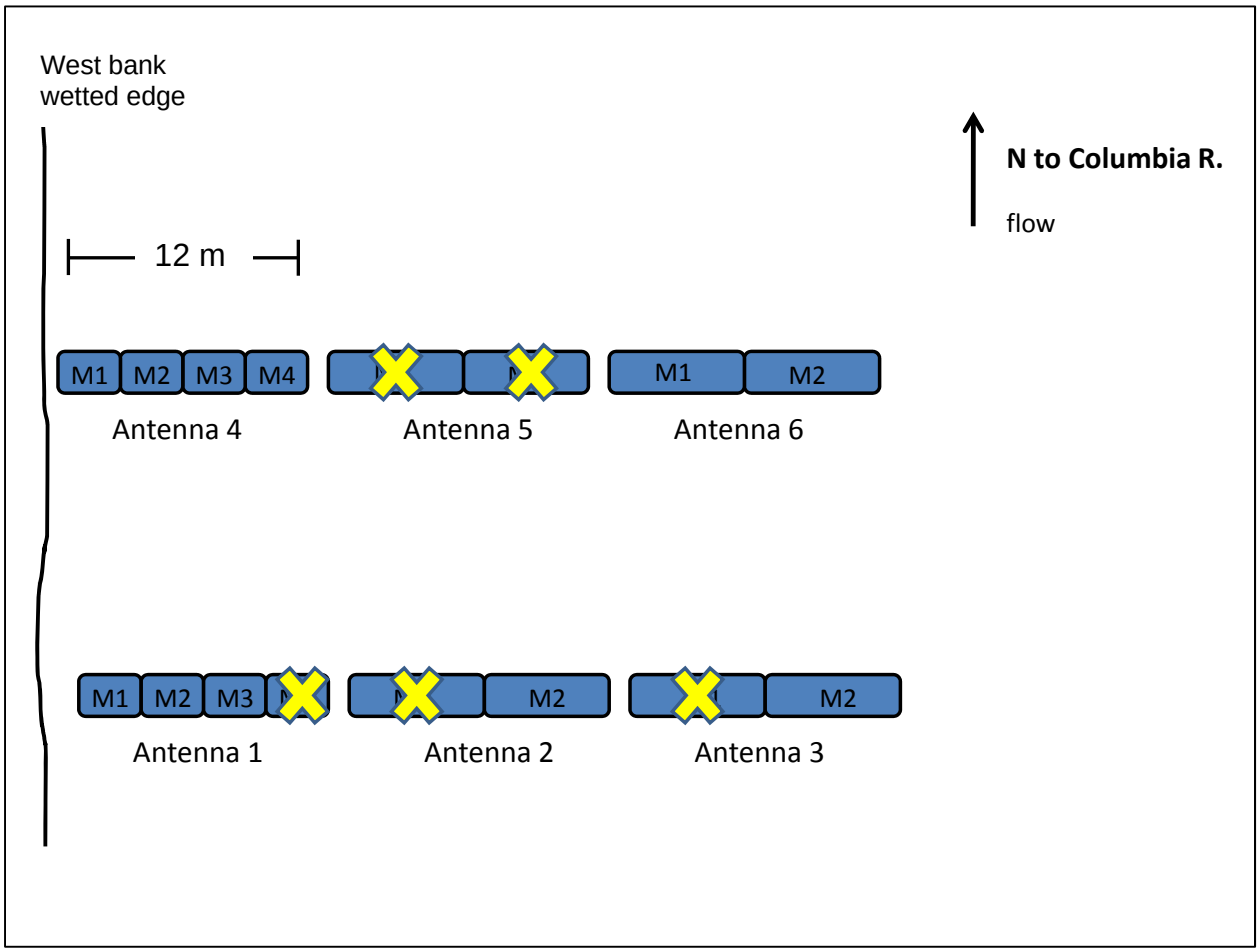

Figure 3. Damages to the PIT-tag interrogation system at the mouth of the Hood River, OR after the flood on 16 January 2011. Module 4 of Antenna 1 was replaced with a 0.3-m mini-module on 11 February 2011. This enabled Antenna 1 to work with the three intact modules. Antennas 2, 3, and 5 were rendered inoperable.

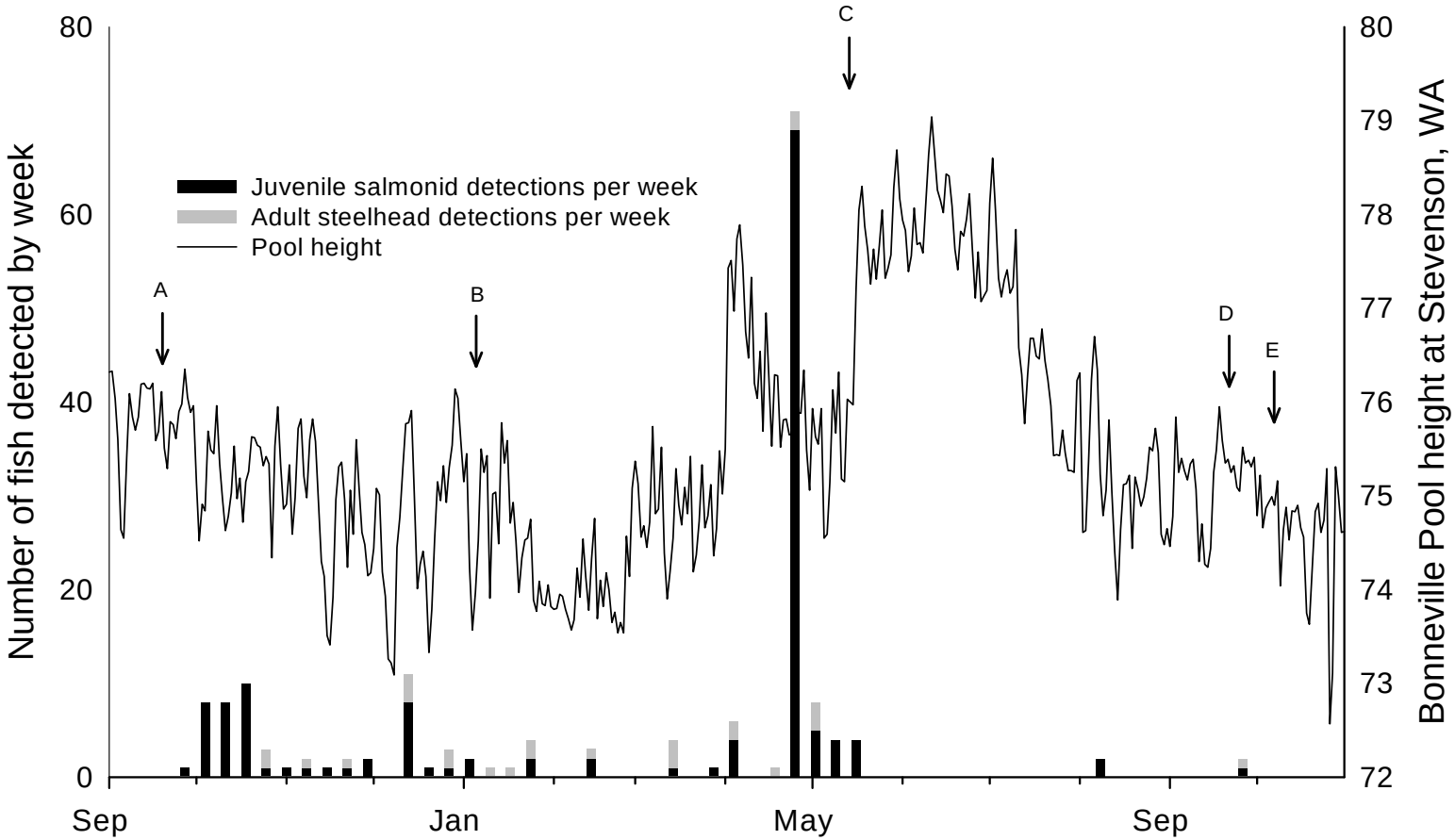

Figure 4. Number of fish detections per week at the PIT-tag interrogation site at the mouth of the Hood River, OR, and Bonneville Pool elevation at the Stevenson, WA gage for the period 14 September 2010 to 31 October 2011. The arrows represent the following events over the course of the year: A – system operation begins; B – 14 January flood disables antennas 1, 2, 3, and 5; C – extremely high Bonneville Pool results in greater depth and sand deposition, burying antennas up to 0.5 m; D – system is reconfigured to three arrays and sand begins to flush, beginning to expose some of the antennas; E – batteries and charge regulator are stolen from the shed resulting in loss of operation for October 2011 until parts were replaced in early November 2011.

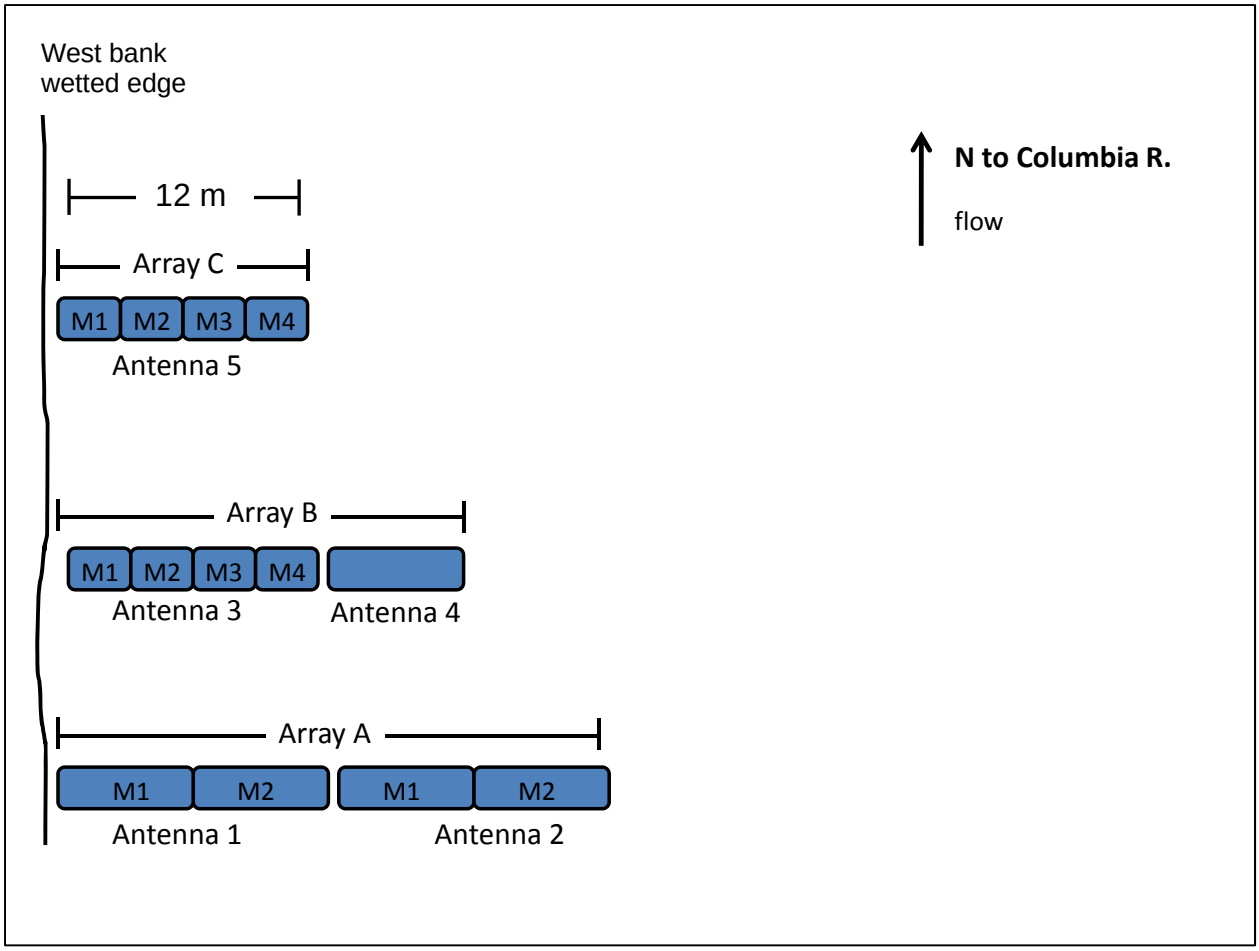

Figure 5. New configuration of the PIT-tag interrogation system at the mouth of the Hood River, OR, as deployed in September 2011. Antenna 3 and 5 are formerly 1 and 3, respectively. The original M4 module of antenna 3 was destroyed in the flood of 14 January 2011, but was replace with a mini-module on 11 February 2011. The mini module will be replaced with a 3-m module if the sand that buried the antenna flushes from the site.

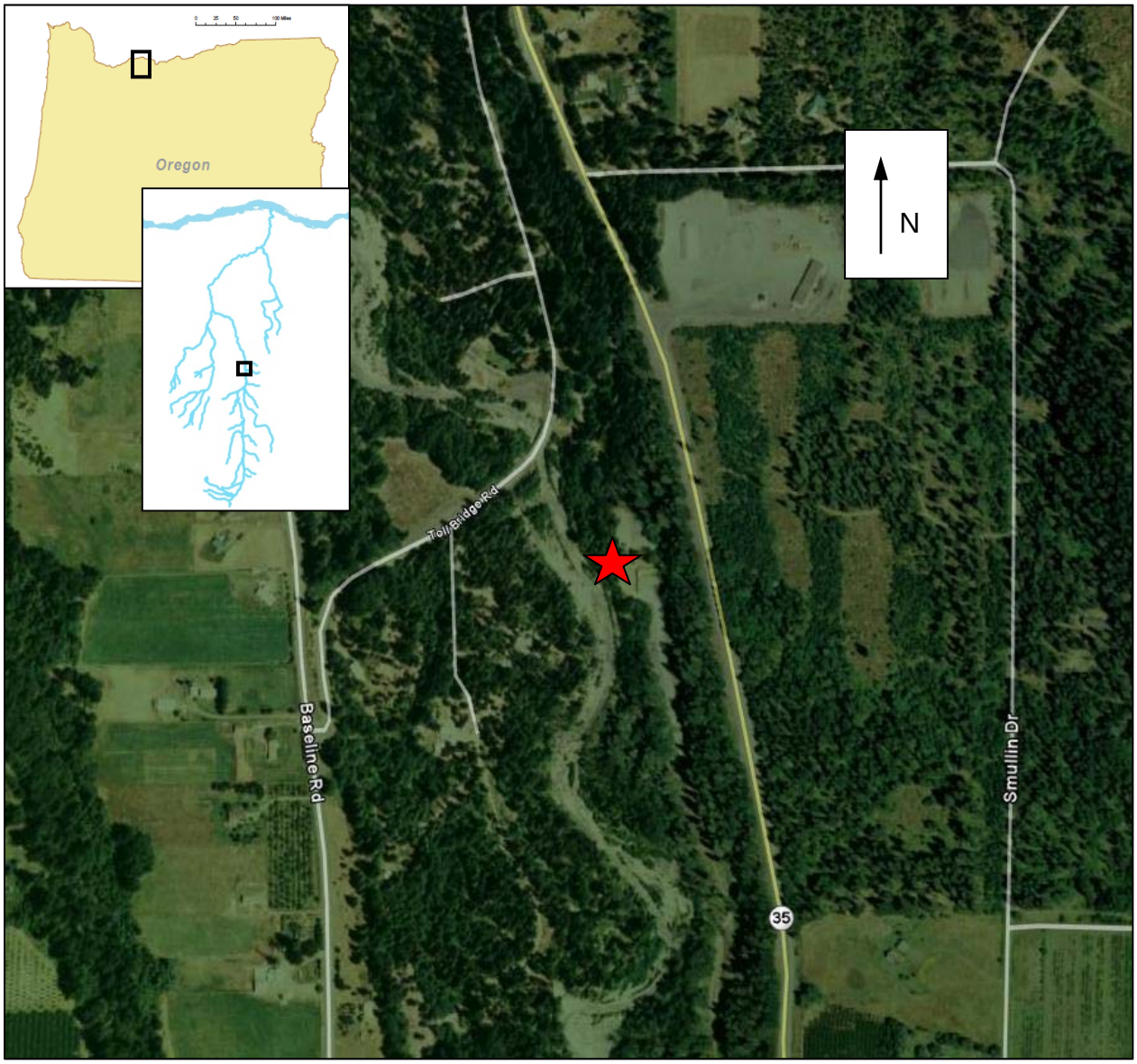

Figure 6. Location of the PIT-tag interrogation system installed at the East Fork Acclimation site on the Hood River, OR.

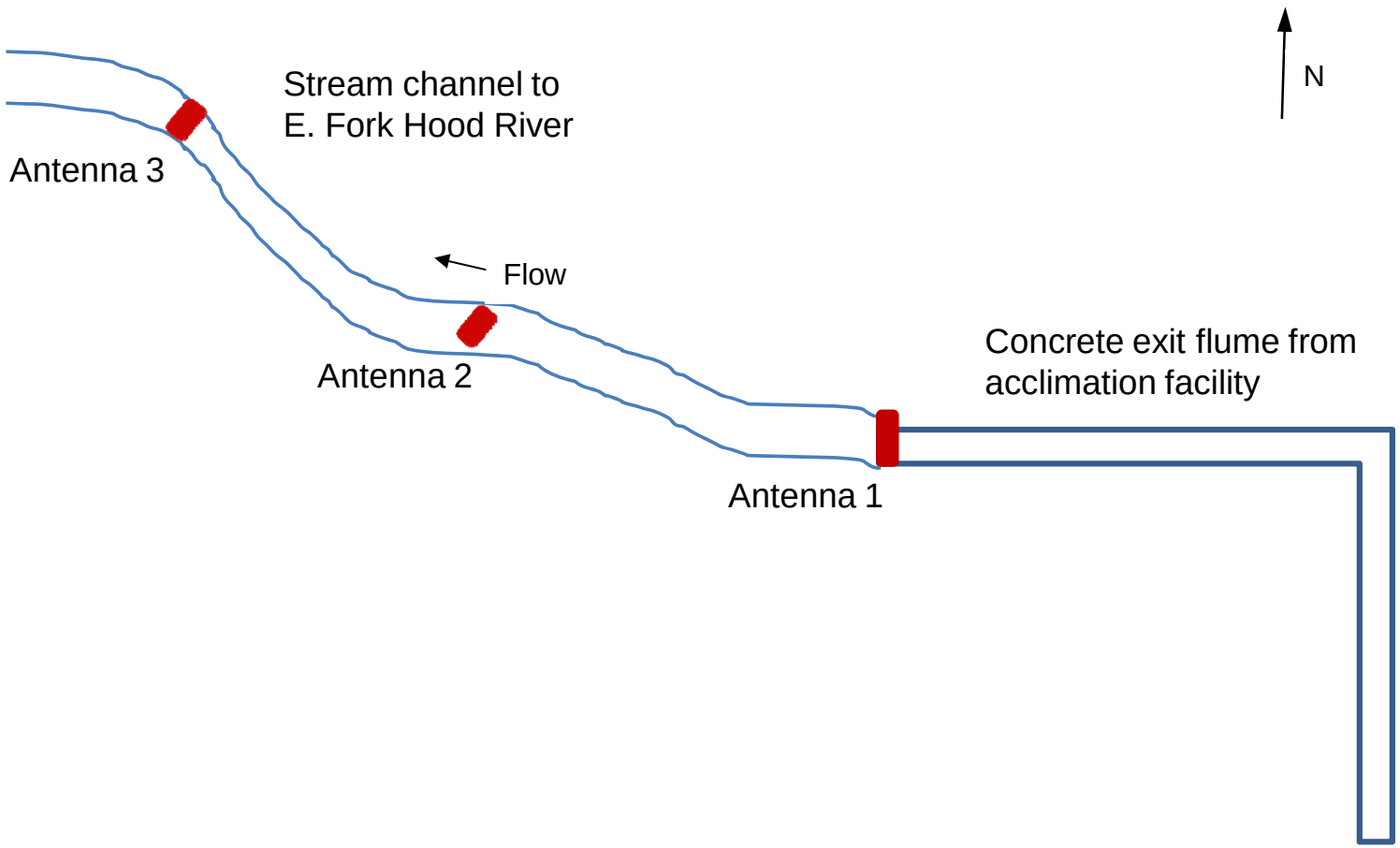

Figure 7. Antenna configuration of the three antennas in the exit channel of the East Fork Acclimation site during spring 2011.

Table 1. Path detection efficiency estimates at the PIT-tag interrogation system at the mouth of the Hood River, OR, for the path over antennas 1 and 4 from detection events during the period 14 September 2010 to 31 October 2011. Efficiencies estimates were calculated by the methods outlined in Connolly et al. 2008. Estimates are not applicable to the period of mid May through September when the antennas were largely buried in sand and not able to read passing fish, or for October 2011 when the site was not in operation due to theft of power system components.

Species	Life stage	Direction	Detection events N	Water level	Path detection efficiency for antennas 1&4	SE	95% CI	CV[a]
Steelhead	Adult	Up	22	Low[b]	0.42	0.20	0.09 - 0.79	48
Steelhead	Adult	Up	10	High	- [c]	-	-	-
Steelhead	Adult	Up	32	All	0.28	0.21	0.06 - 0.63	75
Chinook	Juvenile	Down	24	Low	0.42	0.17	0.13 - 0.74	40
Chinook	Juvenile	Down	71	High	0.59	0.13	0.38 - 0.77	22
Chinook	Juvenile	Down	95	All	0.49	0.09	0.32- 0.65	18
Steelhead	Juvenile	Down	16	Low	0.77	0.14	0.43 - 0.95	18
Steelhead	Juvenile	Down	16	High	0.42	0.21	0.09 – 0.78	50
Steelhead	Juvenile	Down	32	All	0.62	0.13	0.36 - 0.83	21

[c] Coefficient of variation = SE/Efficiency estimate * 100

[b] Low water corresponds to a pool height of < 75.5 feet on the Bonneville Pool at Stevenson Gage

[c] "-" Insufficient sample size to compute